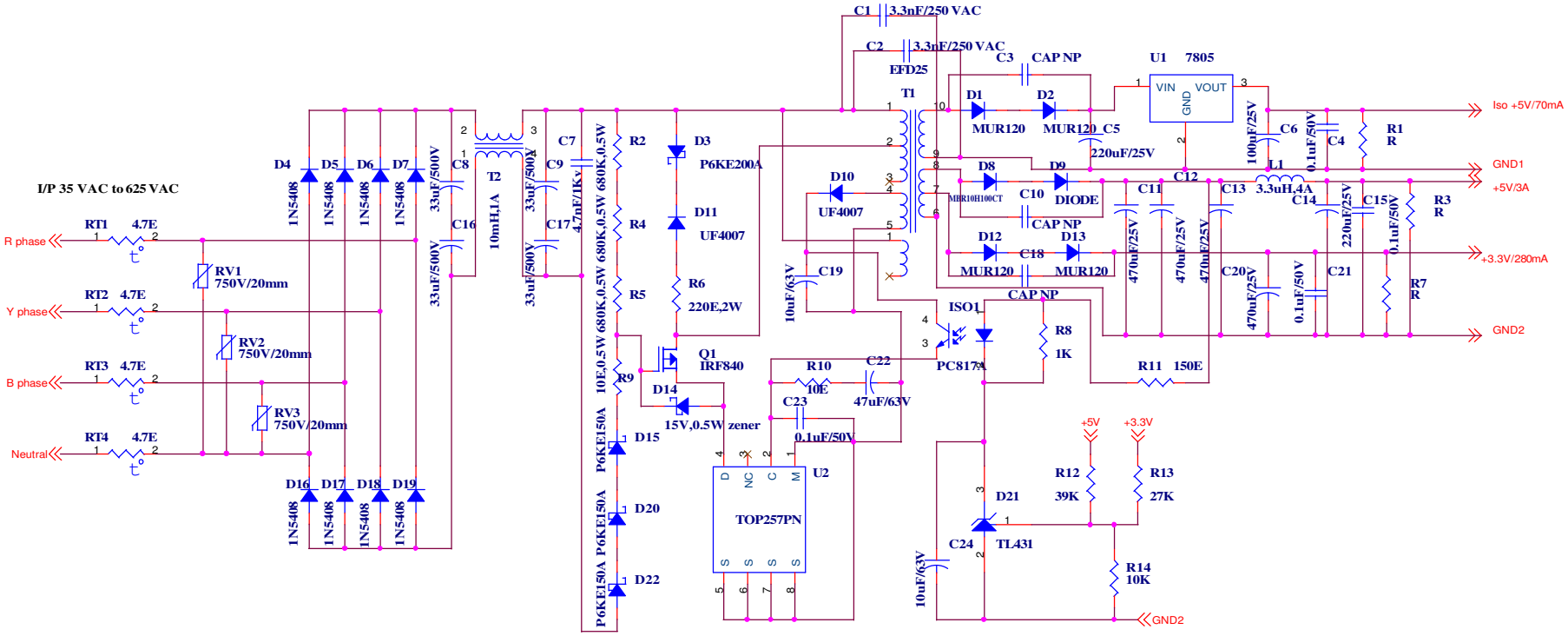
I/P 35 VAC to 625 VAC
R phase
Y phase
B phase
Neutral
RT1 4.7E
RT2 4.7E
RT3 4.7E
RT4 4.7E
RV1 750V/20mm
RV2 750V/20mm
RV3 750V/20mm
D4 D5 D6 D7
1N5408
D16 D17 D18 D19
C8 C16 33uF/500V
T2 10mH,1A
C7 C9 C17 33uF/500V
4.7nF/1Kv
R2 R4 R5 R9 680K,0.5W
R6 220E,2W
10E,0.5W
D3 P6KE200A
D11 UF4007
Q1 IRF840
D14 15V,0.5W zener
D15 D20 D22 P6KE150A
C1 3.3nF/250 VAC
C2 3.3nF/250 VAC
EFD25
T1
D10 UF4007
C19 10uF/63V
R10 10E
C22 47uF/63V
C23 0.1uF/50V
U2 TOP257PN
D NC C M S S S S
D1 D2 MUR120
C3 CAP NP
C5 220uF/25V
D8 D9 MBR10H100CT
C10 CAP NP
DIODE
D12 D13 MUR120
C18 CAP NP
ISO1 PC817A
R8 1K
R11 150E
U1 7805
VIN VOUT GND
C6 100uF/25V
C4 0.1uF/50V
L1 3.3uH,4A
C11 C12 C13 470uF/25V
C14 C20 470uF/25V
C15 220uF/25V
C21 0.1uF/50V
R1 R
R3 R
R7 R
Iso +5V/70mA
GND1
+5V/3A
+3.3V/280mA
GND2
+5V +3.3V
R12 39K
R13 27K
R14 10K
D21 TL431
C24 10uF/63V
GND2