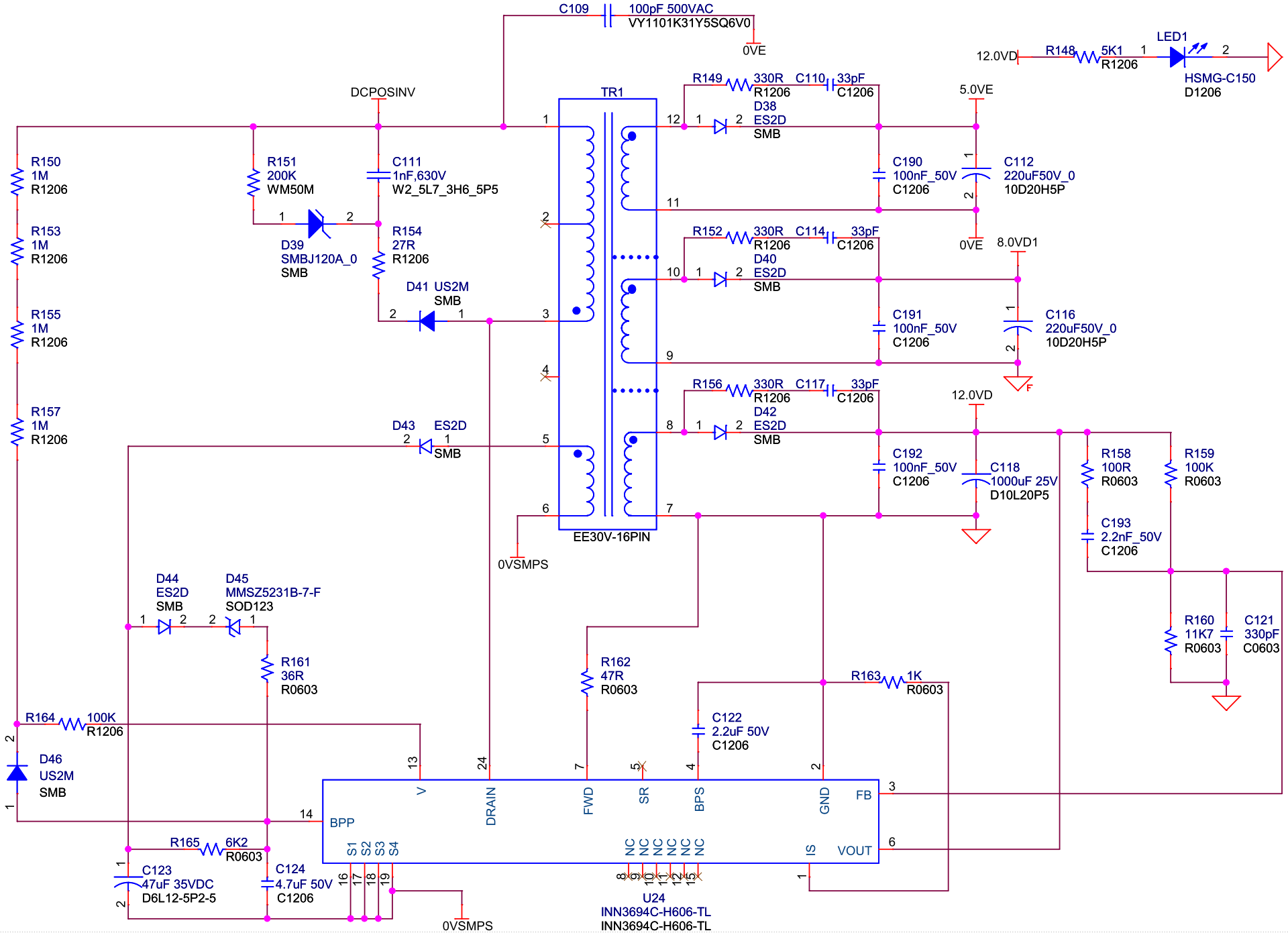
C109
100pF 500VAC
VY1101K31Y5SQ6V0
0VE
12.0VD
R148
5K1
R1206
LED1
HSMG-C150
D1206
DCPOSINV
TR1
R149
330R
R1206
C110
33pF
C1206
D38
ES2D
SMB
5.0VE
R150
1M
R1206
R151
200K
WM50M
C111
1nF,630V
W2_5L7_3H6_5P5
C190
100nF_50V
C1206
C112
220uF50V_0
10D20H5P
R153
1M
R1206
D39
SMBJ120A_0
SMB
R154
27R
R1206
R152
330R
R1206
C114
33pF
C1206
D40
ES2D
SMB
0VE
8.0VD1
D41 US2M
SMB
R155
1M
R1206
C191
100nF_50V
C1206
C116
220uF50V_0
10D20H5P
R156
330R
R1206
C117
33pF
C1206
D42
ES2D
SMB
12.0VD
R157
1M
R1206
D43
ES2D
SMB
C192
100nF_50V
C1206
C118
1000uF 25V
D10L20P5
R158
100R
R0603
R159
100K
R0603
C193
2.2nF_50V
C1206
EE30V-16PIN
0VSMPS
D44
ES2D
SMB
D45
MMSZ5231B-7-F
SOD123
R161
36R
R0603
R162
47R
R0603
R160
11K7
R0603
C121
330pF
C0603
R163
1K
R0603
R164
100K
R1206
C122
2.2uF 50V
C1206
D46
US2M
SMB
V
DRAIN
FWD
SR
BPS
GND
FB
BPP
S1
S2
S3
S4
NC
IS
VOUT
R165
6K2
R0603
C123
47uF 35VDC
D6L12-5P2-5
C124
4.7uF 50V
C1206
U24
INN3694C-H606-TL
INN3694C-H606-TL
0VSMPS