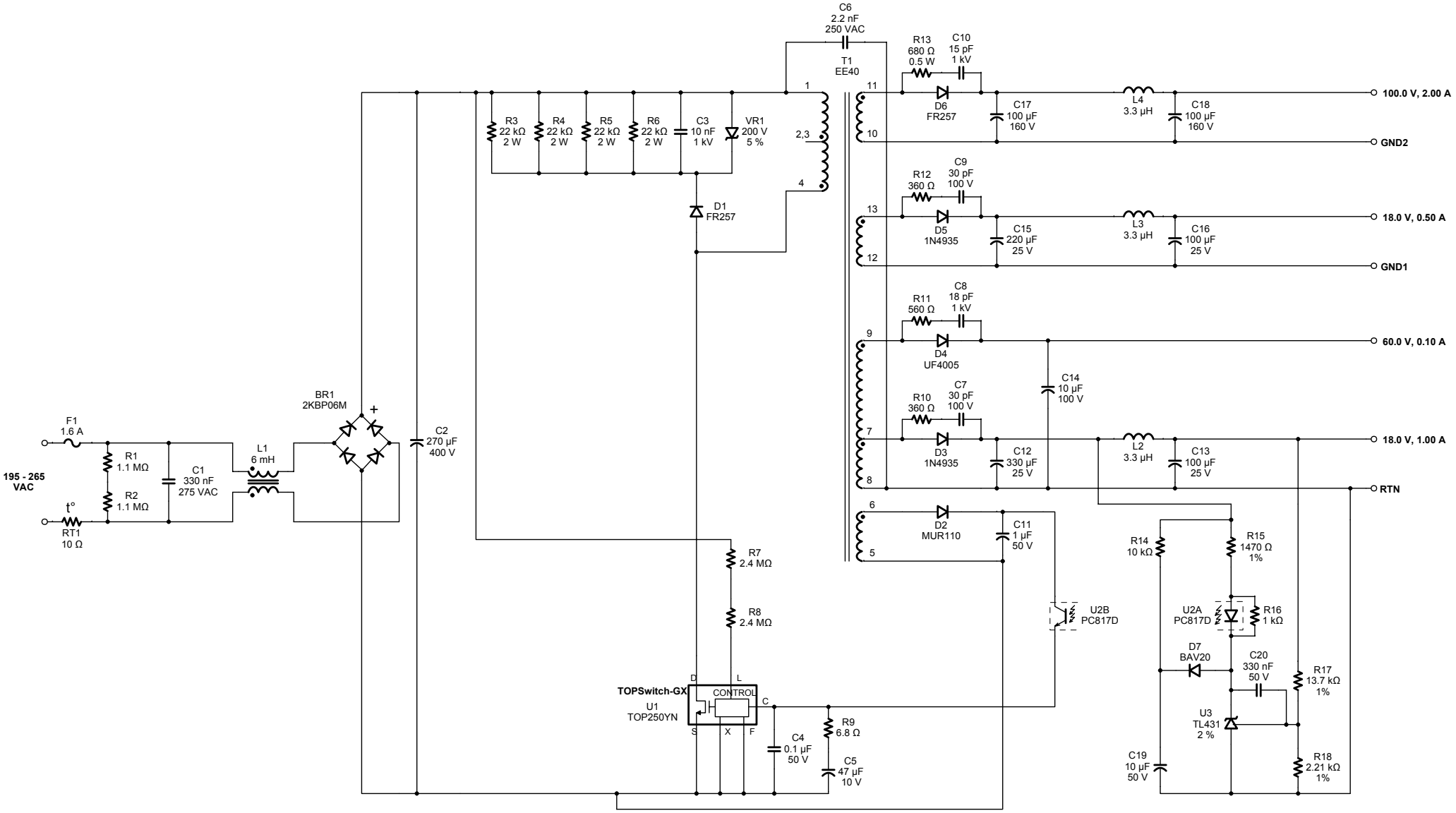
C6
2.2 nF
250 VAC
T1
EE40
R13
680 Ω
0.5 W
C10
15 pF
1 kV
D6
FR257
C17
100 µF
160 V
L4
3.3 µH
C18
100 µF
160 V
100.0 V, 2.00 A
GND2
R3
22 kΩ
2 W
R4
22 kΩ
2 W
R5
22 kΩ
2 W
R6
22 kΩ
2 W
C3
10 nF
1 kV
VR1
200 V
5 %
D1
FR257
R12
360 Ω
C9
30 pF
100 V
D5
1N4935
C15
220 µF
25 V
L3
3.3 µH
C16
100 µF
25 V
18.0 V, 0.50 A
GND1
R11
560 Ω
C8
18 pF
1 kV
D4
UF4005
60.0 V, 0.10 A
C14
10 µF
100 V
R10
360 Ω
C7
30 pF
100 V
D3
1N4935
C12
330 µF
25 V
L2
3.3 µH
C13
100 µF
25 V
18.0 V, 1.00 A
RTN
D2
MUR110
C11
1 µF
50 V
BR1
2KBP06M
C2
270 µF
400 V
F1
1.6 A
195 - 265
VAC
R1
1.1 MΩ
R2
1.1 MΩ
C1
330 nF
275 VAC
L1
6 mH
RT1
10 Ω
R7
2.4 MΩ
R8
2.4 MΩ
TOPSwitch-GX
U1
TOP250YN
CONTROL
D
L
C
S
X
F
C4
0.1 µF
50 V
R9
6.8 Ω
C5
47 µF
10 V
U2B
PC817D
R14
10 kΩ
R15
1470 Ω
1%
U2A
PC817D
R16
1 kΩ
D7
BAV20
C20
330 nF
50 V
R17
13.7 kΩ
1%
U3
TL431
2 %
C19
10 µF
50 V
R18
2.21 kΩ
1%