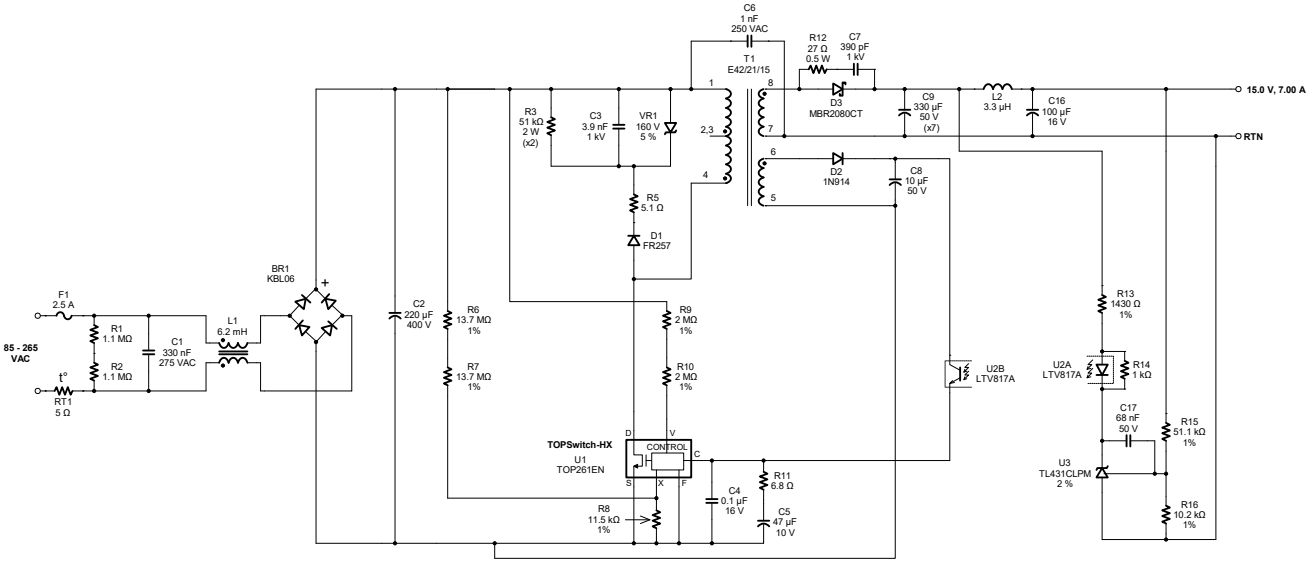
C6
1 nF
250 VAC
R12
27 Ω
0.5 W
C7
390 pF
1 kV
T1
E42/21/15
D3
MBR2080CT
C9
330 µF
50 V
(x7)
L2
3.3 µH
C16
100 µF
16 V
15.0 V, 7.00 A
RTN
R3
51 kΩ
2 W
(x2)
C3
3.9 nF
1 kV
VR1
160 V
5 %
D2
1N914
C8
10 µF
50 V
R5
5.1 Ω
D1
FR257
BR1
KBL06
F1
2.5 A
85 - 265
VAC
R1
1.1 MΩ
R2
1.1 MΩ
RT1
5 Ω
C1
330 nF
275 VAC
L1
6.2 mH
C2
220 µF
400 V
R6
13.7 MΩ
1%
R7
13.7 MΩ
1%
R9
2 MΩ
1%
R10
2 MΩ
1%
TOPSwitch-HX
U1
TOP261EN
CONTROL
D
V
C
S
X
F
R8
11.5 kΩ
1%
C4
0.1 µF
16 V
R11
6.8 Ω
C5
47 µF
10 V
U2B
LTV817A
R13
1430 Ω
1%
U2A
LTV817A
R14
1 kΩ
C17
68 nF
50 V
R15
51.1 kΩ
1%
U3
TL431CLPM
2 %
R16
10.2 kΩ
1%