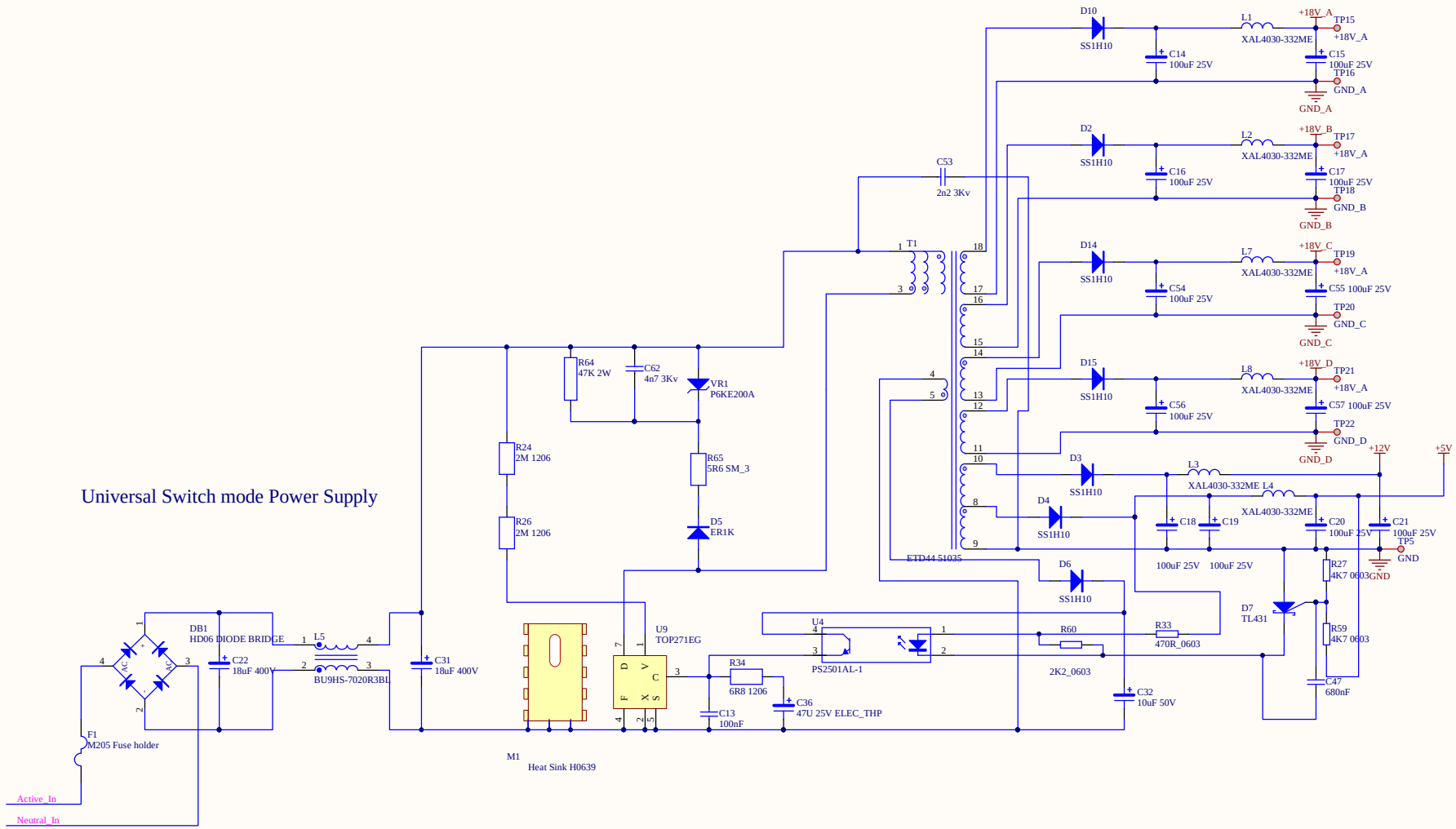

History

Date	Revision	Comments

Title **Power Supply Section**		**Extron Design Services**
Size: A3	Number:51000	Revision:A
Date: *	Time: *	Sheet3 of 11
File: D:\R&D Client\Econopower\51000 Mains Regulator\Development\sch_pcb\Rev F\Power Supply.Schdoc		